REV	DESCRIPTION	DATE	BY
B	Was 22.0" Long Chgd. from 12 Rows to 13	08/20/07	JJG
C	Added Plating Note	2/19/14	BLS
D	Change Finish Note	4/5/16	BLS

ID	PART NUMBER	DESCRIPTION	QTY
	Material	Mild Steel	

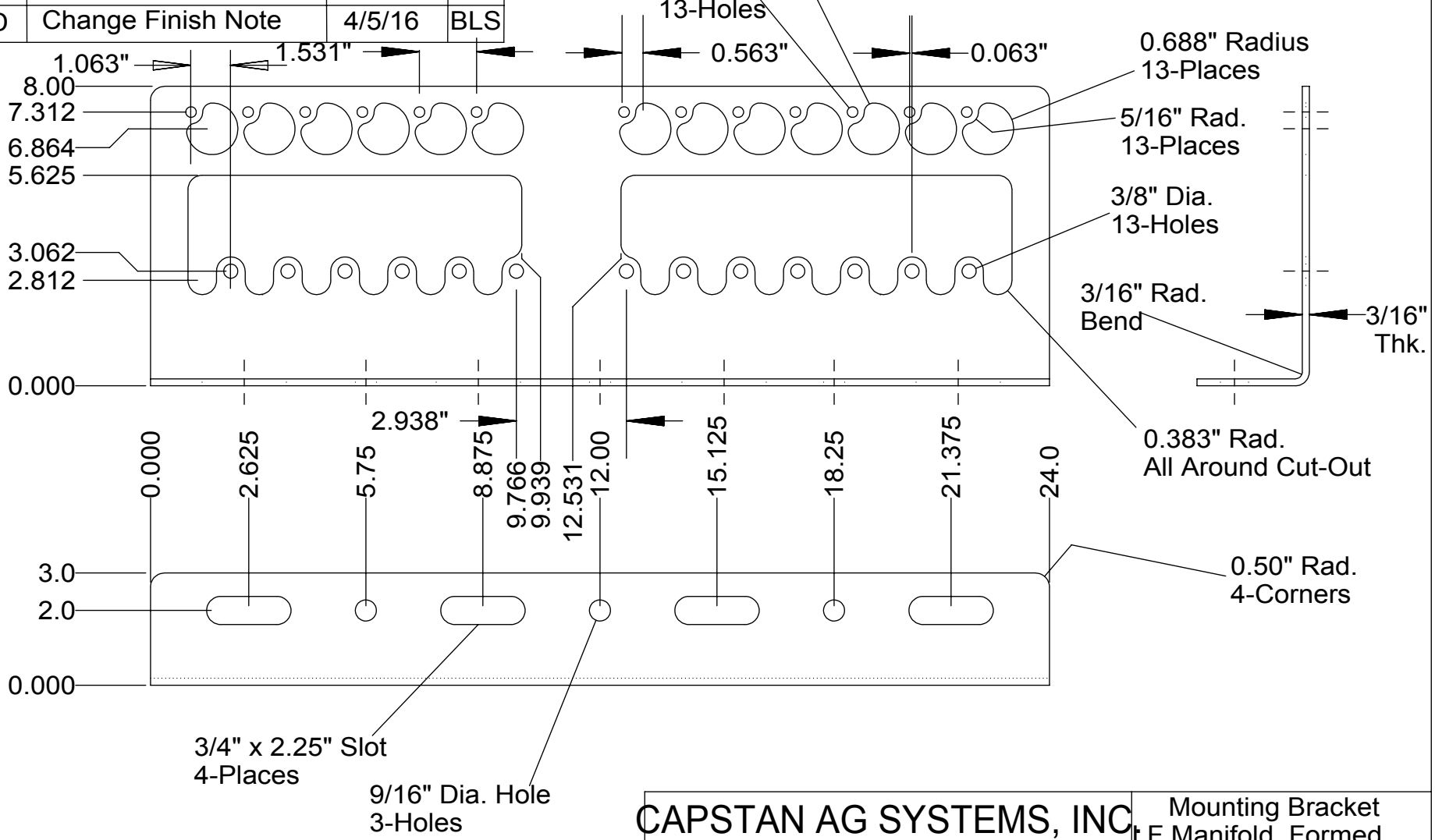

Finish: Charcol Grey Powder Coat Over
Zinc Electroplate:

CAPSTAN AG SYSTEMS, INC.
101 N. KANSAS AVE., TOPEKA, KS 66603

Mounting Bracket
LF Manifold, Formed
13-Row Wilger

DATE	BY	SCALE	PAGE	SIZE
01/19/04	JJG	1/4" = 1"	1 of 1	A

625011-002